Smoke To Ink Conversion System Using Arduino Uno

Team Member Details

Team name : Solvix
Team Members :
Arokiya Nithish. J
Ishwarya. M
(Vel Tech University)
Domain : Smart Automation
Theme : Smart Cities
Date : 26/04/2025

SOLVIX

ABSTRACT :

This project captures smoke emissions, filters carbon particles, and converts them into ink using IoT technology. It helps reduce air pollution, creates a valuable product, and enables real-time monitoring for industries, vehicles, and smart cities.

EXISTING SYSTEM

✅ Pollution to Ink: Air-Ink & Kaalink convert soot into ink.
✅ Carbon Capture: Carbon Black & DAC trap and reuse emissions.
✅ IoT Air Monitoring: Sensors track and control pollution.
✅ Eco-Friendly Ink: Recycled carbon ink supports sustainability.
✅ Emission Control: ESP & Catalytic Converters reduce emissions

SELECTED THEME : SUSTAINABLE CITIES AND COMMUNITIES

- “SUSTAINABLE CITIES AND COMMUNITIES” focus on creating urban environments that are environmentally friendly, economically viable, and socially inclusive. With rapid urbanization, cities face challenges such as air pollution, waste management, and resource depletion. The goal of sustainable cities is to reduce carbon footprints, enhance public health, and promote efficient resource use through smart technologies and green initiatives.

- “SMOKE TO INK CONVERSION SYSTEM” Air pollution, particularly from vehicular emissions and industrial activities, poses a significant threat to urban sustainability. The IoT-based Smoke to Ink Conversion System aims to address this challenge by capturing harmful airborne pollutants and repurposing them into usable ink. This system integrates IoT sensors to monitor air quality in real time and optimize the smoke collection process. By converting pollutants into a valuable resource, this innovation not only reduces environmental hazards but also promotes a circular economy.This project aligns with the theme of sustainable cities by contributing to cleaner air, reducing waste, and utilizing technology for environmental benefits. It exemplifies how smart solutions can transform urban spaces into healthier, more sustainable communities

EXISTING METHOD

EXISTING SYSTEM

✅ Pollution to Ink: Air-Ink & Kaalink convert soot into ink.

✅ Carbon Capture: Carbon Black & DAC trap and reuse emissions.

✅ IoT Air Monitoring: Sensors track and control pollution.

✅ Eco-Friendly Ink: Recycled carbon ink supports sustainability.

✅ Emission Control: ESP & Catalytic Converters reduce emissions.

PROBLEM IDENTIFICATION

Identified Problem:
Pollution, especially airborne carbon emissions (like soot from vehicles and factories), contributes to climate change and health issues. Managing or reducing this pollution is a global concern. The idea of a **pollution-to-ink converter** tackles this by turning captured pollutants into usable ink, thus recycling waste and reducing environmental harm.

Number of Solutions:
Here are **five different solutions** to address the problem through the pollution-to-ink concept:

1. Carbon Capture Devices for Vehicles
•**Description**: Install small carbon capture units on vehicle exhausts to trap carbon particles.
•**How it helps**: Captured carbon can be processed and turned into ink, preventing it from entering the atmosphere.

2. Urban Air Filtering Structures
•**Description**: Deploy air purification towers in urban areas that collect particulate matter from the air.
•**How it helps**: Collected pollutants are processed into pigment for inks, cleaning city air in the process.

3. Factory Emission Recycling Systems
•**Description**: Integrate filters in factories to collect carbon emissions before release.
•**How it helps**: Converts industrial waste into a resource (ink), promoting circular economy practices.

4. Drone-Based Pollution Collection

•**Description**: Use drones equipped with fine filters to hover in high-pollution zones and collect airborne soot.

•**How it helps**: Innovative and mobile way to collect particles for ink production without relying on static structures.

5. Domestic Air Purifier Ink Units

•**Description**: Develop household air purifiers that trap indoor air pollutants and store them for ink conversion.

•**How it helps**: Improves indoor air quality while creating small quantities of usable ink for home printers or art.

PROPOSED METHOD:

1. Overview of the Concept:

The goal is to convert air pollution—mainly **particulate matter (PM)** like carbon soot—into usable **black ink**. This not only reduces airborne pollutants but also provides a sustainable alternative to conventional ink production, which often relies on petroleum-based sources.

2. Key Components of the System:

a. Pollution Collection Unit

•**Function**: Captures particulate matter (PM2.5 and PM10), especially carbon-rich soot, from sources such as vehicle exhausts, factory chimneys, or polluted air.

•**Technology Options**:

- Electrostatic precipitators
- Cyclonic collectors
- Activated carbon filters
- Fine mesh filters (e.g., HEPA-like)

c. Ink Formulation

•**Function**: Mixes purified carbon with a base solution to create ink.

•**Typical Ingredients**:

- Binder (like gum arabic, shellac, or resin)
- Solvent (e.g., water or alcohol)
- Preservatives and stabilizers

•**Output**: A stable, printable black ink that can be used in pens, printers, or art.

d. Storage and Dispensing

•**Function**: Stores the final ink product in cartridges or containers for distribution or personal use.

•**Considerations**:

- Avoid ink drying or sedimentation
- Ensure consistent viscosity and flow

Phase	Details
Research & Design	Design pollution collection units, study particle compositions, test ink formulations
Prototype Development	Build a small-scale converter (e.g., for vehicle exhaust or small factories)
Testing & Optimization	Test ink quality (color density, drying time), optimize filtration and conversion rate
Deployment	Install in vehicles, industries, or urban areas; distribute ink for public use

4. Applications:

Art and Design: Eco-friendly ink for drawing, printing, and branding

Education: Awareness campaigns using ink made from pollution

Corporate Social Responsibility: Companies can offset emissions by producing their own branded ink

FLOWCHART:

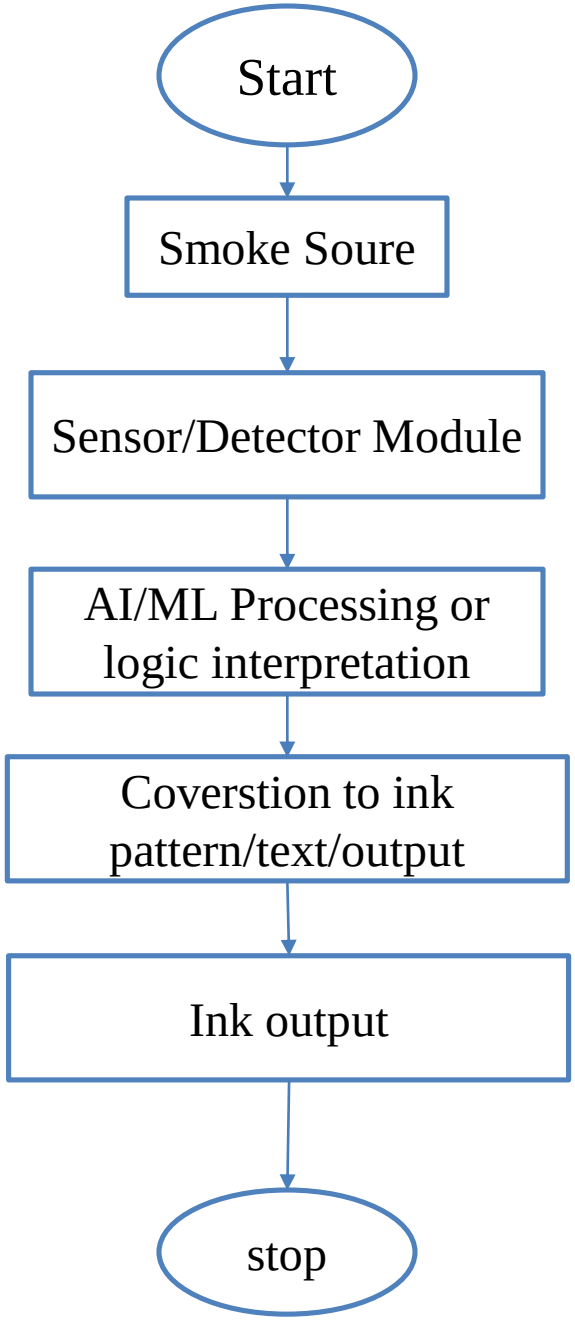
Start
Smoke Soure
Sensor/Detector Module
AI/ML Processing or logic interpretation
Coverstion to ink pattern/text/output
Ink output
stop

DIAGRAM

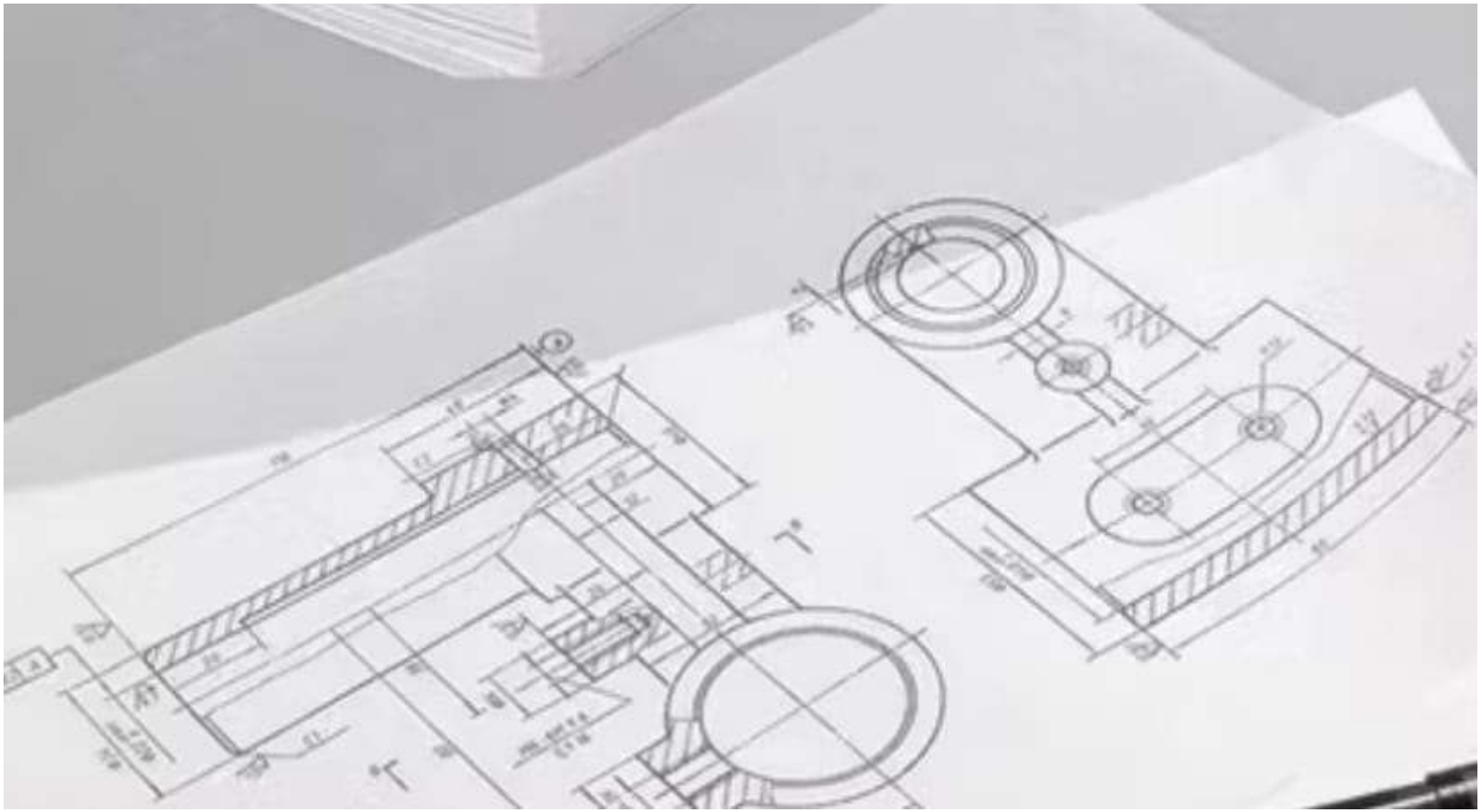

BLOCK DIAGRAM:

```
+-------------------+     +---------------------+     +----------------------+
|                   |     |                     |     |                      |
| Pollution Source  +---->+ Pollution Collection +---->+ Soot Extraction &     |
| (e.g., vehicle    |     | Unit (e.g., Kaalink) |     | Purification         |
| exhaust, factory  |     |                     |     |                      |
| emissions)        |     |                     |     |                      |
|                   |     |                     |     |                      |
+-------------------+     +---------------------+     +----------------------+
                                |                         |
                                v                         v
                     +-------------------+     +----------------------+
                     |                   |     |                      |
                     | Carbon Purification|     | Pigment Processing    |
                     | & Detoxification   |     | (Grinding & Mixing)   |
                     |                   |     |                      |
                     +-------------------+     +----------------------+
                               |                         |
                               v                         v
                     +-------------------+     +----------------------+
                     |                   |     |                      |
                     | Ink Formulation   |     | Quality Control &     |
                     | (Binder & Solvent)|     | Packaging             |
                     |                   |     |                      |
                     +-------------------+     +----------------------+
```

1. Pollution Source
•Source of carbon emissions (vehicles, factories).
•Emits particulate matter (PM2.5/PM10).

2. Pollution Collection Unit
•Captures carbon particles from emissions.
•Uses filters, electrostatic devices, or Kaalink.

3. Soot Extraction & Purification
•Removes dust, metals, and harmful substances.
•Uses washing, filtration, and heating.

4. Carbon Purification & Detoxification
•Deep-cleaning of carbon particles.
•Ensures safety and stability for ink use.

5. Pigment Processing
•Grinds carbon into fine, smooth pigment.
•Ensures uniform size and texture.

6. Ink Formulation

•Mixes pigment with binder, solvent, and additives.

•Creates smooth, printable black ink.

7. Quality Control & Packaging

•Tests ink quality (flow, color, drying).

•Packages in cartridges or bottles.

MATERIALS

Sl.No.	Material name	Specification	Qty	Total Price
2.	5V Relay		1	300
3.	DC Motor		3	600
4.	Resistor		2	100
5.	Bread clip		1	200
6.	Solder wire		1	250
7.	7906 IC		2	240
8.	1000uF Capacitor		16	64
9.	PCB		2	480
10.	Carbon filter		1	1400
11.	Hardware		1	700
12.	blower		1	200
13.	14V Battery		1	700
			TOTAL	5234

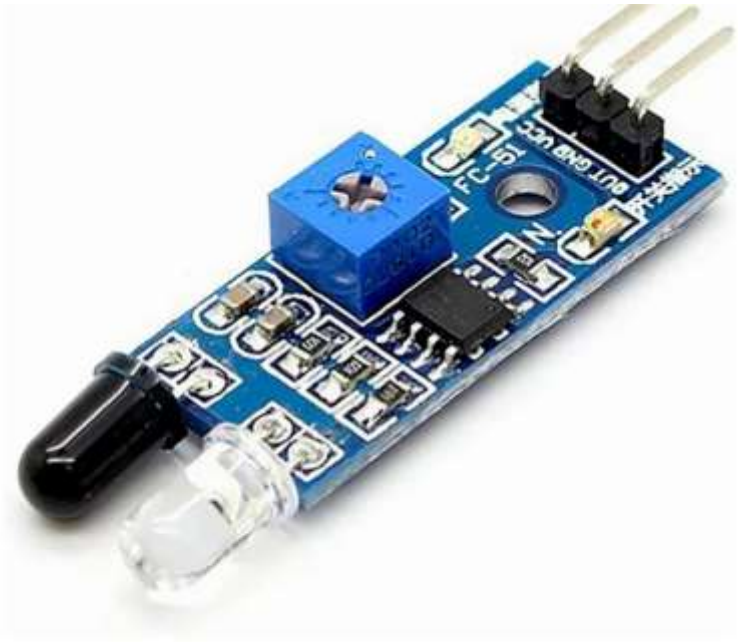

IR SENSOR

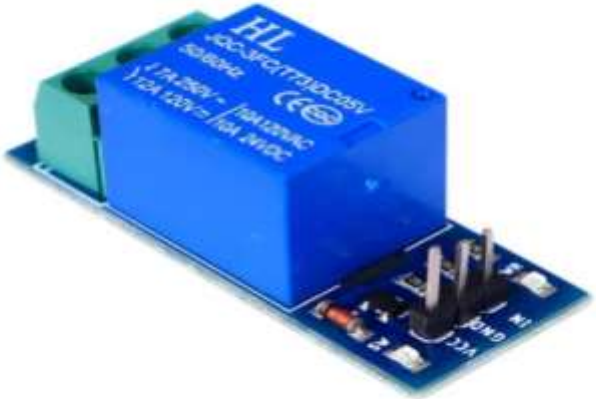

5V RELAY

CARBON FILTER

.

- **5V Relay**:

Acts as a switch to control the power supplied to the DC motor based on signals from the IR sensor.

- **DC Motor**:

Drives a fan or blower to create airflow, assisting in moving captured soot particles through the system.

- **CARBON FILTER**:

Make it as carbon filter

Resistor:

Limits the current to protect sensitive components and ensure safe operation.

- **Solder Wire**:

Used for making electrical connections between components on the PCB.

- **PCB (Printed Circuit Board)**:

Serves as the foundation for mounting and connecting electronic components.

- **1000uF Capacitor**:

Provides power stabilization to the DC motor, ensuring smooth operation.

- **12V Battery**:

Supplies the necessary power to the system, including the motor and control circuit.

- **7906 IC**:

A voltage regulator used to stabilize the power supply to the control circuit.

- **blower**:

Employed to simulate airflow, aiding in the movement of captured particles through the system.

HARDWARE PROTOTYPE

WORKING IMAGE:

SOFTWARE DETAILS

- Software Details for Smoke to Ink Conversion System: Design and Visualization Used for diagramming, simulation, and mechanical design. Auto CAD / SolidWorks / CATIA – For mechanical design and layout.
- Fritzing / Proteus / Tinkercad – For electronic circuit design and simulation.
- PowerPoint / Word / Photoshop / Paint – For simple concept visualization.

Programming & Control

- Used to control sensors, motors, or cameras in real-time systems.
- Arduino IDE – If using Arduino to control smoke detectors or actuators.

Python – For image processing, machine learning, or AI-based pattern recognition.

- MATLAB – For simulations and control algorithms.
- C/C++ For embedded programming (e.g., STM32 or ESP32).

AI/ML Integration (if converting smoke patterns to ink/text)

- Used for analyzing smoke visuals and converting them to interpretable output.
- OpenCV (Python) – For real-time image processing of smoke patterns.
- TensorFlow / PyTorch – For training a model to classify or interpret smoke patterns.
- Stable Diffusion / DALL·E – For generative conversion of smoke-like visuals to ink art.
- Runway ML / Teachable Machine – For easy-to-train AI models without coding.

Output and Display

- Used to display or generate ink-based output from smoke input.
- Python with Matplotlib or PIL – To generate and visualize ink-style patterns.
- Printer API / CNC Control Software – If physically printing the ink output.

WORKING PRINCIPLE

Emission Capture

•**Device:** A device, such as **Kaalink**, is retrofitted to the exhaust pipe of vehicles or generators.

•**Function:** It captures particulate matter (PM) emitted from the combustion process.

•**Operation:** The device activates when the engine starts, drawing in exhaust gases and trapping soot particles

Soot Collection

•**Mechanism:** The captured soot is stored in a container known as a "carbon bank."

•**Duration:** Typically, it takes about two weeks for the device to fill up completely.

Purification Process

•**Objective:** Remove harmful components like heavy metals and carcinogens from the collected soot.

•**Methods:** The soot undergoes chemical treatments, including filtration, heating, and chemical processes to detoxify it.

Ink Production

•**Formulation:** The purified carbon pigment is mixed with solvents and oils to produce various ink products.

•**Varieties:** This includes markers, screen printing ink, and other artistic inks.

•**Application**

•**Usage:** The resulting ink is applied in various domains, from industrial printing to artistic endeavors.

ADVANTAGES & LIMITATIONS

Advantages of Smoke-to-Ink Converter

1.Environmental Benefit

1. Reduces air pollution by capturing harmful particulate matter (PM) from vehicle or industrial exhausts.
2. Prevents toxic soot from entering the atmosphere.

2.Sustainable Raw Material

1. Uses waste emissions (which are otherwise pollutants) as a carbon source instead of fossil-fuel-based materials.

3.Reduces Carbon Footprint

1. Converts carbon emissions into useful ink products, contributing to circular economy efforts.

4.Awareness and Innovation

1. Promotes environmental consciousness and offers a tangible, innovative solution for pollution reuse.

5.Cost Savings in Long Term

1. Once the capture infrastructure is in place, raw material (soot) is free and abundant.

6.Versatile Applications

1. Can produce ink for printing, calligraphy, street art, etc.

Disadvantages Compared to Existing Methods

1.Limited Production Scale

1. Traditional ink factories operate on a massive scale; smoke-to-ink systems are still relatively small and localized.

2.High Initial Setup Cost

1. Requires specialized capture devices (like KAALINK or Chakr Shield), purification units, and handling systems.

3.Purification Challenges

1. Removing heavy metals and toxic chemicals from soot is complex and may not always be 100% effective.

4.Regulatory Hurdles

1. Needs to comply with environmental and safety regulations, especially for ink used in commercial products.

5.Ink Quality Consistency

1. May vary based on the type of emission source (e.g., diesel vs. petrol vs. biomass), unlike standard inks with consistent formulations.

6.Limited Public Adoption

1. Technology is still in early stages and not widely available or adopted

CONCLUSION

The **Smoke-to-Ink Converter** project represents a groundbreaking approach to addressing urban pollution by transforming harmful emissions into valuable products. Initiatives like **Graviky Labs' Air-Ink** and **Chakr Innovation's POINK** have demonstrated the feasibility of capturing particulate matter from exhaust systems and converting it into usable ink.

By retrofitting devices such as **Kaalink** and **Chakr Shield** to exhaust pipes, these systems capture soot particles, which are then processed to remove toxins and converted into ink products. This innovative method not only reduces air pollution but also provides a sustainable alternative to traditional ink production, which often relies on fossil fuels.

While the technology is still in its early stages and faces challenges such as scalability and consistency in ink quality, the potential environmental benefits make it a promising solution. By repurposing pollutants into useful products, the Smoke-to-Ink Converter project exemplifies how innovation can turn environmental challenges into opportunities for sustainability.

- If you're interested in exploring this concept further or developing a similar project, feel free to ask for more detailed information or guidance.

REFERENCES:

S.NO	TITLE	AUTHOR	JOURNEY DETAILS	YEAR
1.	Printed electronics enabling electro chemical sencing in soli	Sharar Muhtasim	Agriculture Improving on decision and action of formers	2024
2.	Green ink revolution	Anirudh thorbole	Manufacturing framework for 3D printable inks	2024
3.	Data-Driven Recycling Transformatio n for Enhancing paper and carboard pin	S Srinivasan, R swathy, V Srividhya	Modern Age Technologies for Health and Engineering Science (AMATHE)	2024

THANK YOU